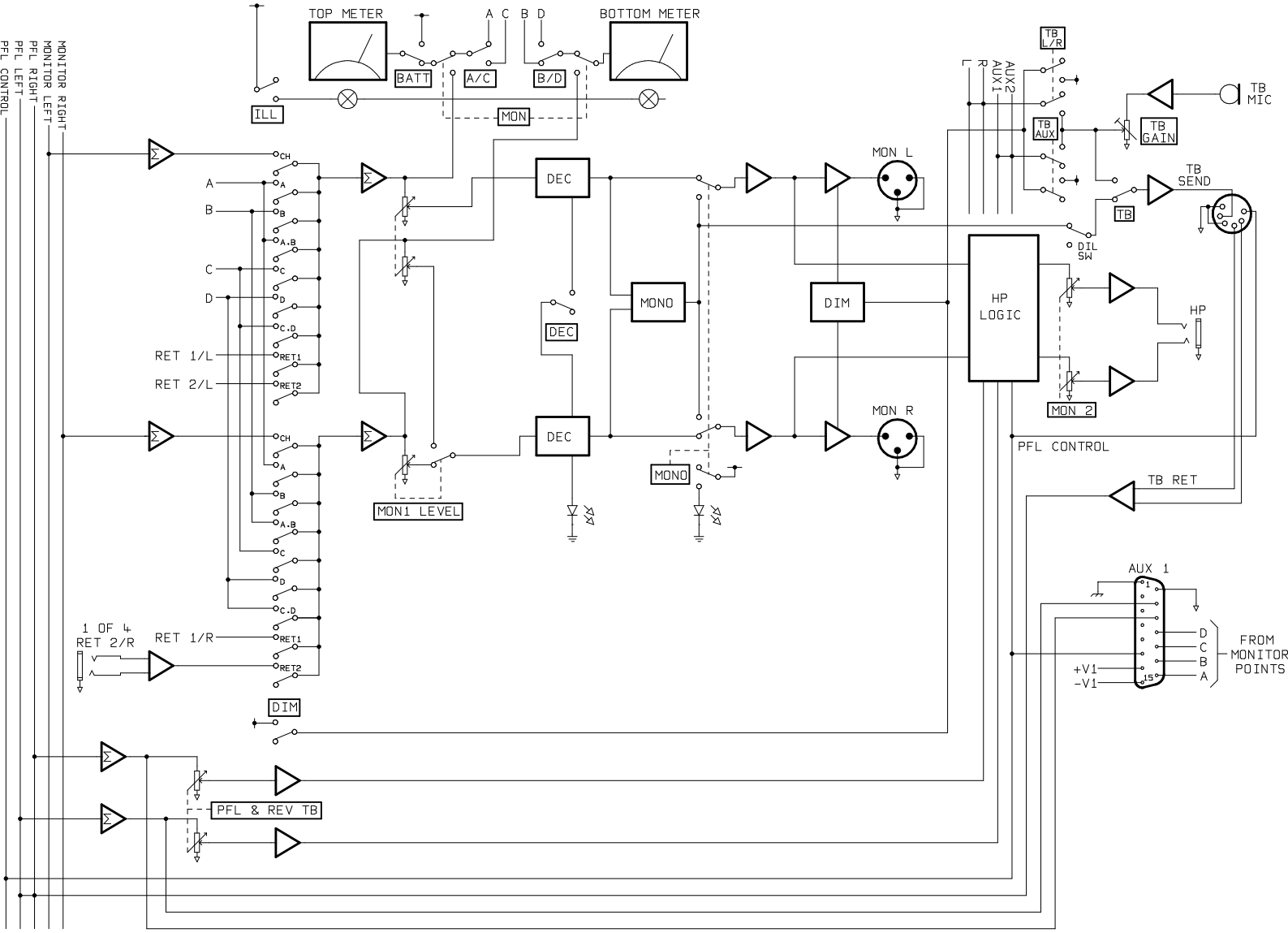
TOP METER
BOTTOM METER
A C
B D
BATT
A/C
B/D
ILL
MON
MONITOR RIGHT
MONITOR LEFT
PFL RIGHT
PFL LEFT
PFL CONTROL
A
B
C
D
RET 1/L
RET 2/L
RET 1/R
1 OF 4
RET 2/R
CH
A
B
A.B
C
D
C.D
RET1
RET2
DEC
MONO
DIM
MON1 LEVEL
MON L
MON R
HP LOGIC
TB L/R
TB AUX
TB GAIN
TB MIC
TB SEND
TB
DIL SW
HP
MON 2
PFL CONTROL
TB RET
AUX 1
AUX2
AUX1
L
R
+V1
-V1
FROM MONITOR POINTS
PFL & REV TB